Reference No. NWS-2013-916
Applicant Port of Clarkston
In the Snake River
At Clarkston
Asotin County, Washington
Proposed work: Dredge accumulated sediments
Sheet 1 of 8
Date: 10-3-13

Reference No. NWW-2013-519
Applicant Port of Lewiston
In the Clearwater River
At Lewiston
Nez Perce County, Idaho
Proposed work: Dredge Accumulated sediments
Sheet 1 of 7
Date: 10-3-13

VOLUME 1 ICE HARBOR NAVIGATION LOCK APPROACH

VOLUME 2 SNAKE AND CLEARWATER CONFLUENCE

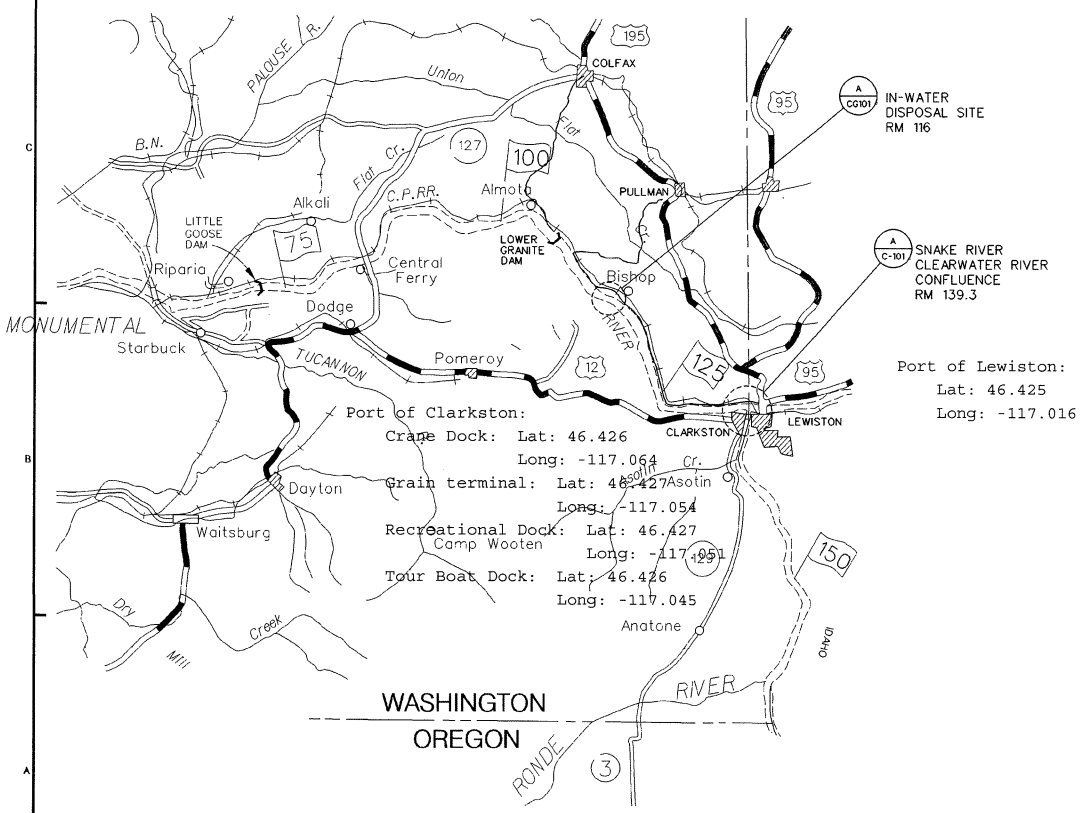

SNAKE RIVER CONFLUENCE
NOT TO SCALE

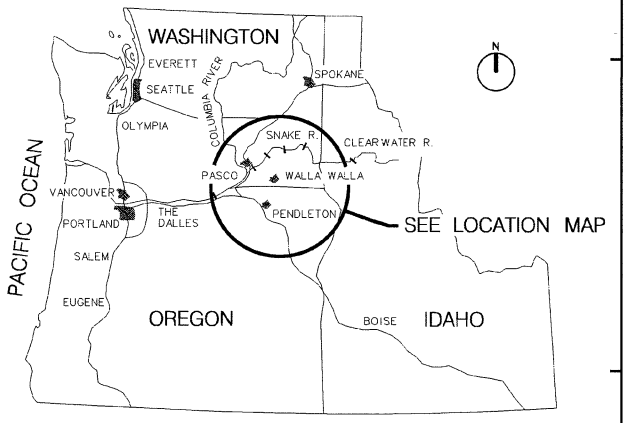

VICINITY MAP
NOT TO SCALE

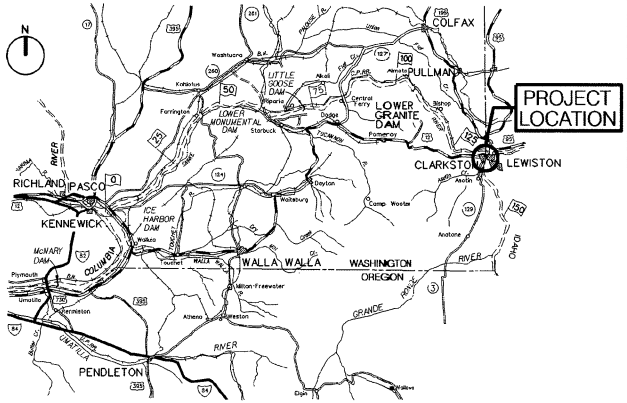

LOCATION MAP
NOT TO SCALE

BCOES BackCheck SET
10/3/2013

This project was designed by: U.S. Army Corps of Engineers, The Walla Walla District, Engineering Division, Design Branch, Civil Section. Recommended by: Chief, Design Branch. Approved by: Brian Miller, P.E. Chief, Eng & Const Div. Date:

DESIGNED BY: C. BEEN
DWN BY: J. BOND
CHKED BY: DWN BY: CHK BY:
SUBMITTED BY: CHIEF, DESIGN BRANCH
DATE: DY MON YR
SOLICITATION NO. XX-B-XXXX
CONTRACT NO.
CDG-1-0-1/576

U.S. ARMY ENGINEER DISTRICT CORPS OF ENGINEERS WALLA WALLA, WASHINGTON

LOWER SNAKE AND ICE HARBOR LOCK AND DAMS
NAVIGATION CHANNEL MAINTENANCE
SNAKE AND CLEARWATER CONFLUENCE
COVER SHEET AND LOCATION MAPS

Sheet number:
G-001
VOLUME 2

L:\LLA\CAD\LLFP01\LLFP01-V2-G-001---.DGN

BORDER SIZE IS ANSI D

$TIME DATE AND TIME PLOTTED:03-OCT-2013 09:13 DESIGN FILE:L:\LLA\CAD\LLFP01\LLFP01-V2-G-001---.DGN SCALE$SCALE$

Reference No. NWS-2013-916
Applicant Port of Clarkston
In the Snake River
At Clarkston
Asotin County, Washington
Proposed work: Dredge accumulated sediments
Sheet 2 of 8
Date: 10-3-13

Reference No. NWW-2013-519
Applicant Port of Lewiston
In the Clearwater River
At Lewiston
Nez Perce County, Idaho
Proposed work: Dredge Accumulated sediments
Sheet 2 of 7
Date: 10-3-13

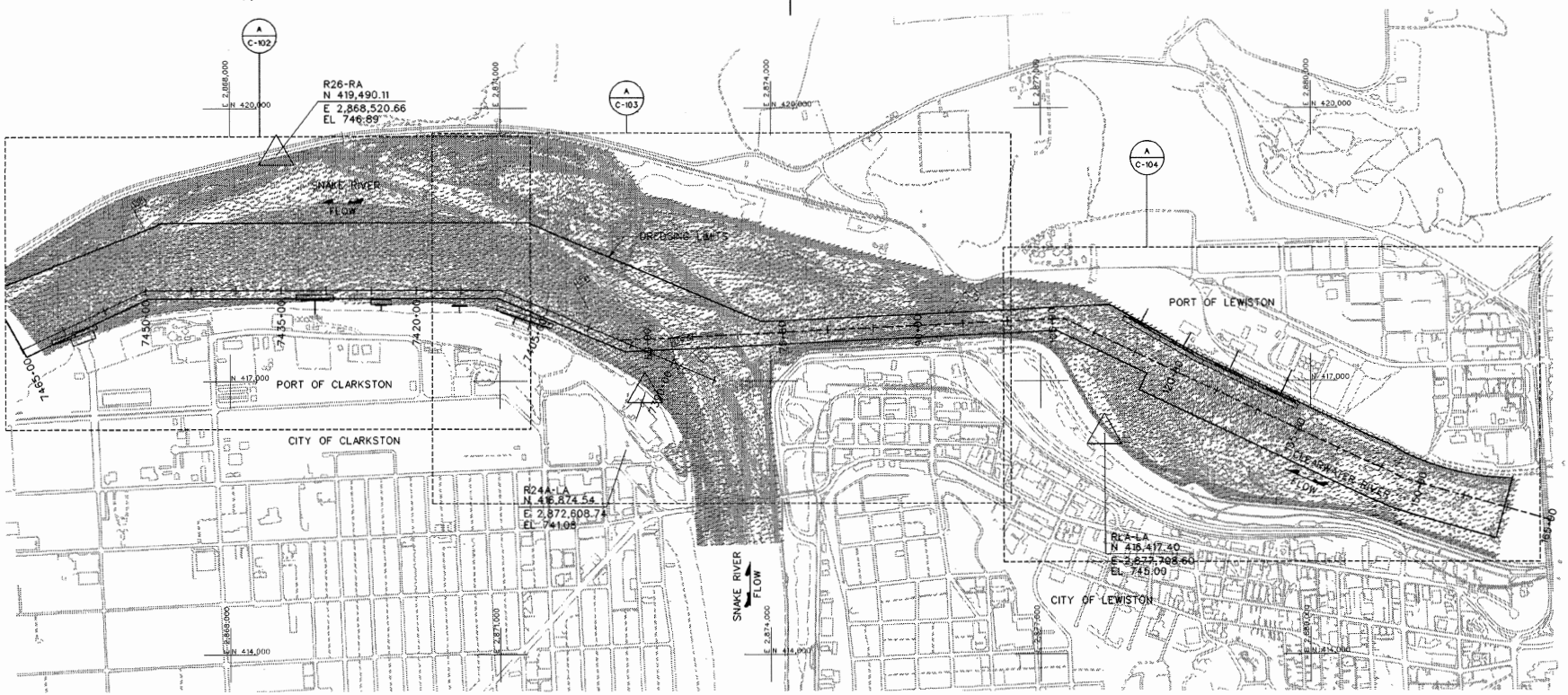

REF G-001 VOL 2 (A) SITE PLAN: SNAKE RIVER CONFLUENCE

0' 600' 1200'

LEGEND

RIVER MILE

SURVEY CONTROL

NOTES:

1. HORIZONTAL DATUM: WASHINGTON COORDINATE SYSTEM (WCS), SOUTH ZONE, NORTH AMERICAN DATUM ADJUSTMENT OF 1927 (NAD27). VERTICAL DATUM: NATIONAL GEODETICVERTICAL DATUM ADJUSTMENT OF 1929 (NGVD 29).

2. A LARGE ROCK IN FRONT OF CRANE DOCK IS TO BE REMOVED DURING DREDGING. THE LARGE ROCK IS APPROXIMATELY 2000 LBS AND 30' FROM THE FACE OF THE CENTER OF THE CRANE DOCK. SEE SPECIFICATIONS FOR DISPOSAL OF BOULDER.

3. A MULTIBEAM BATHYMETRIC SURVEY OF THE SNAKE AND CLEARWATER RIVER CONFLUENCE WAS CONDUCTED BY TERRASOND LTD. ON SEPTEMBER 29 - OCTOBER 3, 2012 WITHIN NAVIGATION CHANNEL LIMITS UNDER ORIGINAL CONTRACT. ADDITIONAL DATA WAS COLLECTED NOVEMBER 11-14TH FROM BANK TO BANK UNDER MODIFICATION 1.

US Army Corps of Engineers
Walla Walla District

BCOES BackCheck SET
10/3/2013

Symbol	Description	Date	Appr.	Date	Appr.	Description	Date	Appr.

DESIGNED BY C. BECH
DATE DY MON YR
DWN BY: J. BOND
CHKD BY: J. BOND
SOLICITATION NO. XX-B-XXXX
CHIEF DESIGN SPL SEC. V. GIBSON, P.E.
CONTRACT NO. GDG-1-0-1/578

U.S. ARMY ENGINEER DISTRICT CORPS OF ENGINEERS WALLA WALLA, WASHINGTON

LOWER SNAKE AND JOE WARREN LOCK AND DAMS
SNAKE RIVER AND CLEARWATER RIVER

NAVIGATION CHANNEL MAINTENANCE
SNAKE AND CLEARWATER CONFLUENCE

SITE PLAN

Sheet number:
C-101
VOLUME 2

L:\LLA\CAD\LLFP01\LLFP01-V2-C-101---.DGN

BORDER SIZE IS ANSI D

$TIME DATE AND TIME PLOTTED:03-OCT-2013 08:08 DESIGN FILE:L:\LLA\CAD\LLFP01\LLFP01-V2-C-101---.DGN

SCALE$SCALE$

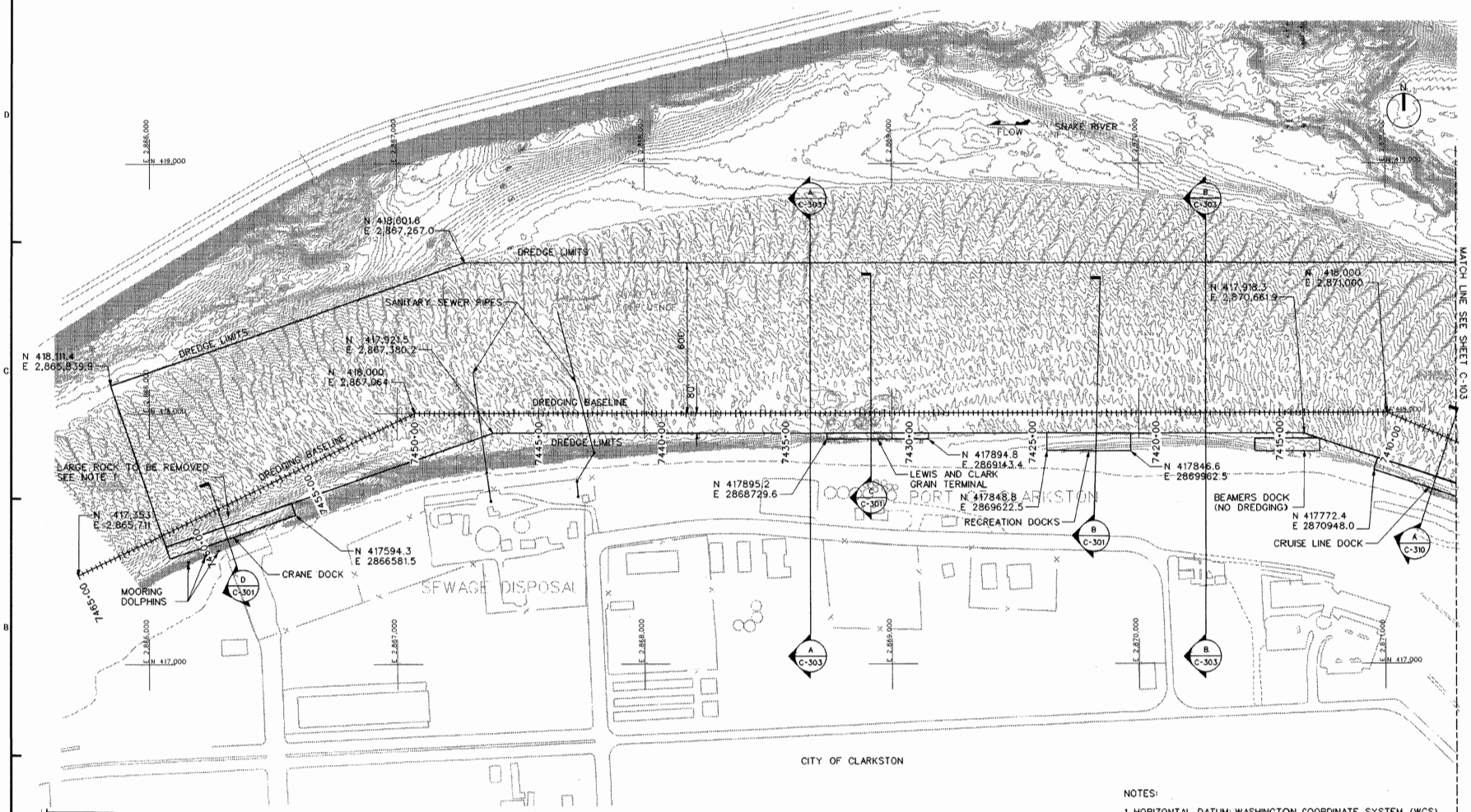

Reference No. NWS-2013-916
Applicant Port of Clarkston
In the Snake River
At Clarkston
Asotin County, Washington
Proposed work: Dredge accumulated sediments
Sheet 3 of 8
Date: 10-3-13

REF C-101 VOL 2 (A) DREDGING PLAN: PORT OF CLARKSTON AREA

0' 200' 400'

NOTES:

1. HORIZONTAL DATUM: WASHINGTON COORDINATE SYSTEM (WCS), SOUTH ZONE, NORTH AMERICAN DATUM ADJUSTMENT OF 1927 (NAD27). VERTICAL DATUM: NATIONAL GEODETICVERTICAL DATUM ADJUSTMENT OF 1929 (NGVD 29).

2. A LARGE ROCK IN FRONT OF CRANE DOCK IS TO BE REMOVED DURING DREDGING. THE LARGE ROCK IS APPROXIMATELY 2000 LBS AND 30' FROM THE FACE OF THE CENTER OF THE CRANE DOCK. SEE SPECIFICATIONS FOR DISPOSAL OF BOULDER.

3. A MULTIBEAM BATHYMETRIC SURVEY OF THE SNAKE AND CLEARWATER RIVER CONFLUENCE WAS CONDUCTED BY TERRASOND LTD. ON SEPTEMBER 29 - OCTOBER 3, 2012 WITHIN NAVIGATION CHANNEL LIMITS UNDER ORIGINAL CONTRACT. ADDITIONAL DATA WAS COLLECTED NOVEMBER 11-14TH FROM BANK TO BANK UNDER MODIFICATION 1.

US Army Corps of Engineers
Walla Walla District

BCOES BackCheck SET
10/3/2013

U.S. ARMY ENGINEER DISTRICT
CORPS OF ENGINEERS
WALLA WALLA, WASHINGTON

DESIGNED BY: C. BLEEN
DRAWN BY: J.R. BOND
CHKD BY:
SUBMITTED BY: T. GIBBONS, P.E.
CHIEF, DESIGN SEC.
DATE: DY MONTH YR
SCALE: AS NOTED
CONTRACT NO. XX-B-XXXX
FILE NO. GDG-1-0-35/29

LOWER GRANITE AND ICE HARBOR LOCK AND DAMS
SNAKE RIVER AND CLEARWATER RIVER
NAVIGATION CHANNEL MAINTENANCE
SNAKE AND CLEARWATER CONFLUENCE
DREDGING PLAN
PORT OF CLARKSTON AREA

Sheet number:
C-102
VOLUME 2

L:\LLA\CAD\LLFP01\LLFP01-V2-C-102---.DGN

BORD

*TIME DATE AND TIME PLOTTED:03-OCT-2013 08:09 DESIGN FILE:L:\LLA\CAD\LLFP01\LLFP01 V2-C-102---.DGN SCALE*SCALE*

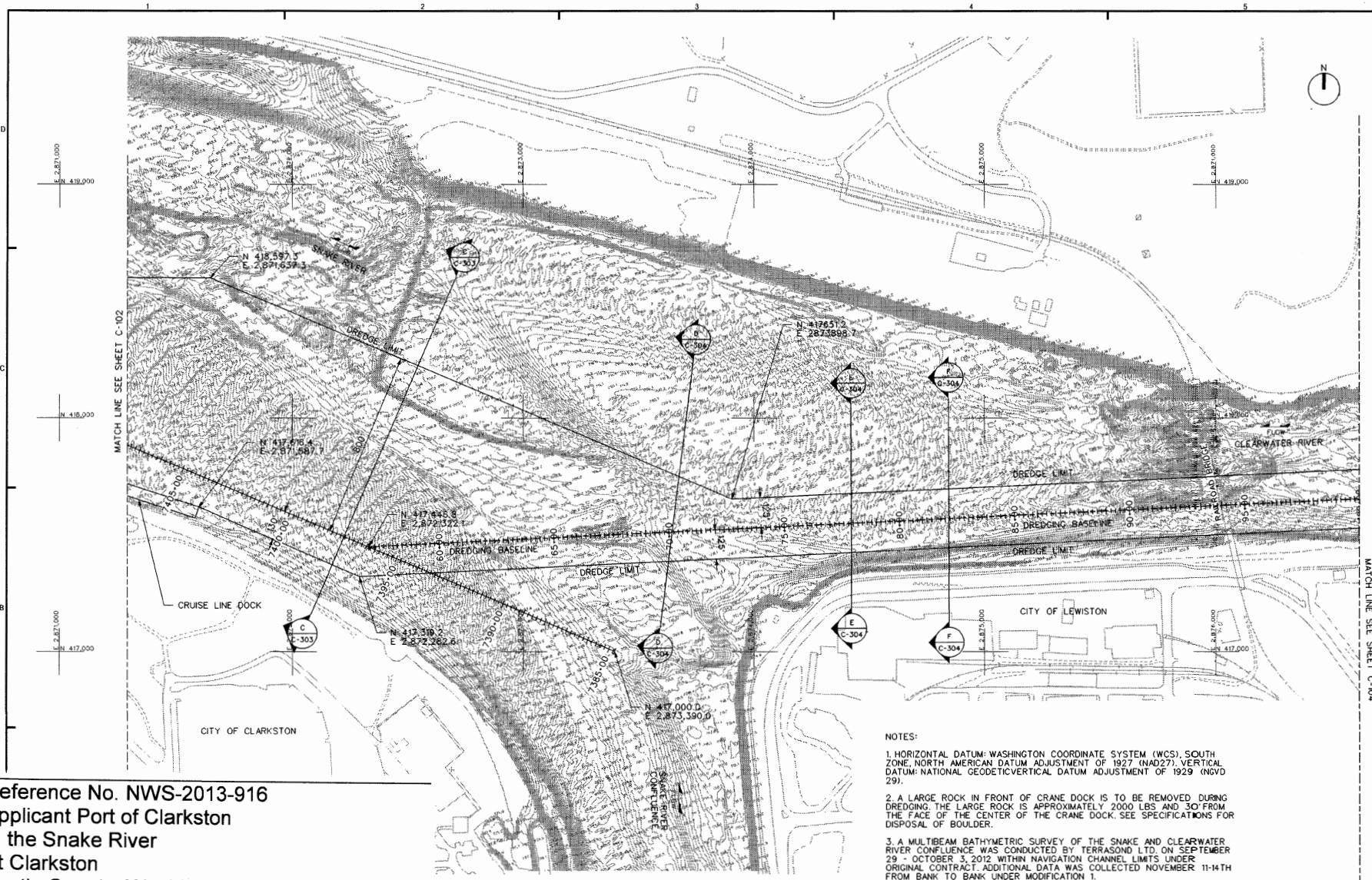

NOTES:

1. HORIZONTAL DATUM: WASHINGTON COORDINATE SYSTEM (WCS), SOUTH ZONE, NORTH AMERICAN DATUM ADJUSTMENT OF 1927 (NAD27). VERTICAL DATUM: NATIONAL GEODETICVERTICAL DATUM ADJUSTMENT OF 1929 (NGVD 29).

2. A LARGE ROCK IN FRONT OF CRANE DOCK IS TO BE REMOVED DURING DREDGING. THE LARGE ROCK IS APPROXIMATELY 2000 LBS AND 30' FROM THE FACE OF THE CENTER OF THE CRANE DOCK. SEE SPECIFICATIONS FOR DISPOSAL OF BOULDER.

3. A MULTIBEAM BATHYMETRIC SURVEY OF THE SNAKE AND CLEARWATER RIVER CONFLUENCE WAS CONDUCTED BY TERRASOND LTD. ON SEPTEMBER 29 - OCTOBER 3, 2012 WITHIN NAVIGATION CHANNEL LIMITS UNDER ORIGINAL CONTRACT. ADDITIONAL DATA WAS COLLECTED NOVEMBER 11-14TH FROM BANK TO BANK UNDER MODIFICATION 1.

A DREDGING PLAN: CONFLUENCE AREA

0' 200' 400'

US Army Corps of Engineers
Walla Walla District

BCOES BackCheck SET
10/3/2013

U.S. ARMY ENGINEER DISTRICT
CORPS OF ENGINEERS
WALLA WALLA, WASHINGTON

DESIGNED BY: C. BEEN
DRAWN BY: J. BOND
CHECKED BY: CHK BY
SUBMITTED BY: Y. GIBSONS, P.E.
CHIEF, ENGINEERING DES. SEC.
DATE: BY: MMDD YYY
CONTRACT NO. XX-B-XXXX
FILE: GDG-1-0-35/30

LOWER GRANITE AND ICE HARBOR LOCK AND DAMS
SNAKE RIVER AND CLEARWATER RIVER
NAVIGATION CHANNEL MAINTENANCE
SNAKE AND CLEARWATER CONFLUENCE
DREDGING PLAN
CONFLUENCE AREA

Sheet number:
C-103
VOLUME 2

L:\LLA\CAD\LLFP01\LLFP01-V2-C-103---.DGN

Reference No. NWS-2013-916
Applicant Port of Clarkston
In the Snake River
At Clarkston
Asotin County, Washington
Proposed work: Dredge accumulated sediments
Sheet 4 of 8
Date: 10-3-13

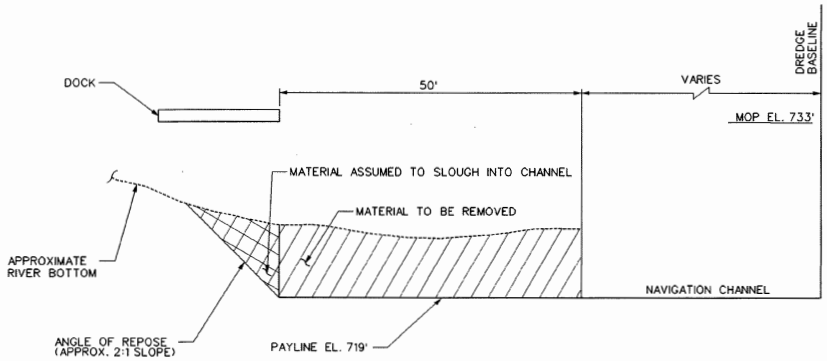

PORT OF CLARKSTON: CRUISE LINE DOCK
TYPICAL SECTION: STA. 7403+00 THROUGH 7411+00

REF C-102 VOL 2 (A)

NOT TO SCALE

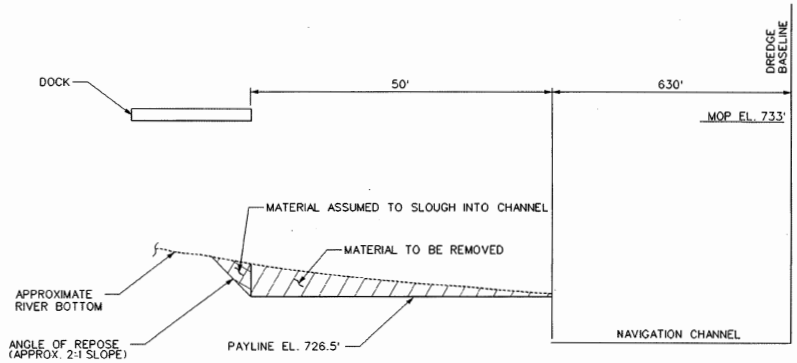

PORT OF CLARKSTON: RECREATION DOCK
TYPICAL SECTION: STA. 7422+00 THROUGH 7425+00

REF C-102 VOL 2 (B)

NOT TO SCALE

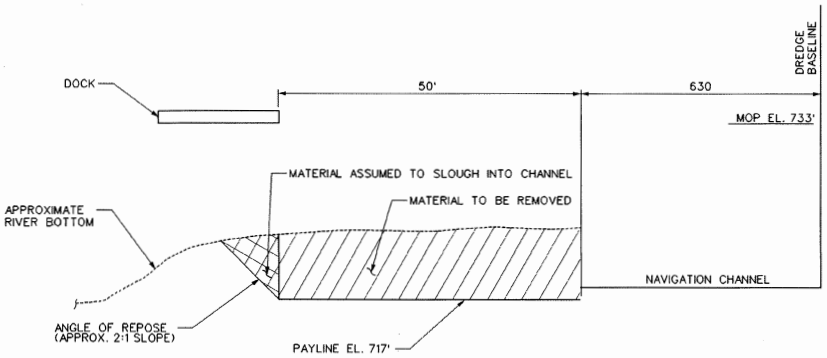

PORT OF CLARKSTON: LEWIS AND CLARK GRAIN TERMINAL
TYPICAL SECTION: STA. 7429+00 THROUGH 7434+00

REF C-102 VOL 2 (C)

NOT TO SCALE

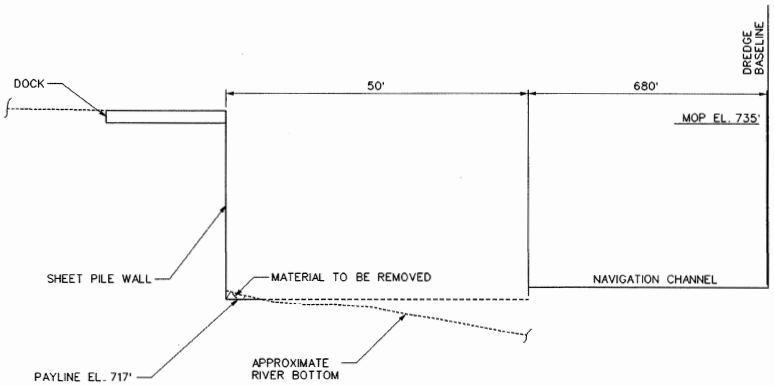

PORT OF CLARKSTON: CRANE DOCK
TYPICAL SECTION: STA. 7456+00 THROUGH 7462+00

REF C-102 VOL 2 (D)

NOT TO SCALE

Reference No. NWS-2013-916
Applicant Port of Clarkston
In the Snake River
At Clarkston
Asotin County, Washington
Proposed work: Dredge accumulated sediments
Sheet 5 of 8

US Army Corps of Engineers
Walla Walla District

BGOES BackCheck SET
10/3/2013

U.S. ARMY ENGINEER DISTRICT
CORPS OF ENGINEERS
WALLA WALLA, WASHINGTON

DESIGNED BY: C. BEECH
DRAWN BY: J. BOND
CHKD BY: Y. CARBONE, P.E.
SUBMITTED BY: Y. CARBONE, P.E. CHIEF, ENGINEERING DES. SEC.
DATE: 07 MARCH 1.YR
SOLICITATION NO. XX-B-XXXX
CONTRACT NO.
FILE: GDG-1-0-35/32

LOWER GRANITE AND ICE HARBOR LOCK AND DAMS
SNAKE RIVER AND CLEARWATER RIVER
NAVIGATION CHANNEL MAINTENANCE
SNAKE AND CLEARWATER CONFLUENCE
PORT OF CLARKSTON, CRESCENT DOCK
VARIOUS DOCKS
TYPICAL SECTIONS

Sheet number:
C-301
VOLUME 2

BORDER SIZE IS ANSI D

*TIME DATE AND TIME PLOTTED:03-OCT-2013 08:11 DESIGN FILE:L:\LLA\CAD\LLFP01\LLFP01-V2-C-301---.DGN SCALE*SCALE*

L:\LLA\CAD\LLFP01\LLFP01-V2-C-301---.DGN

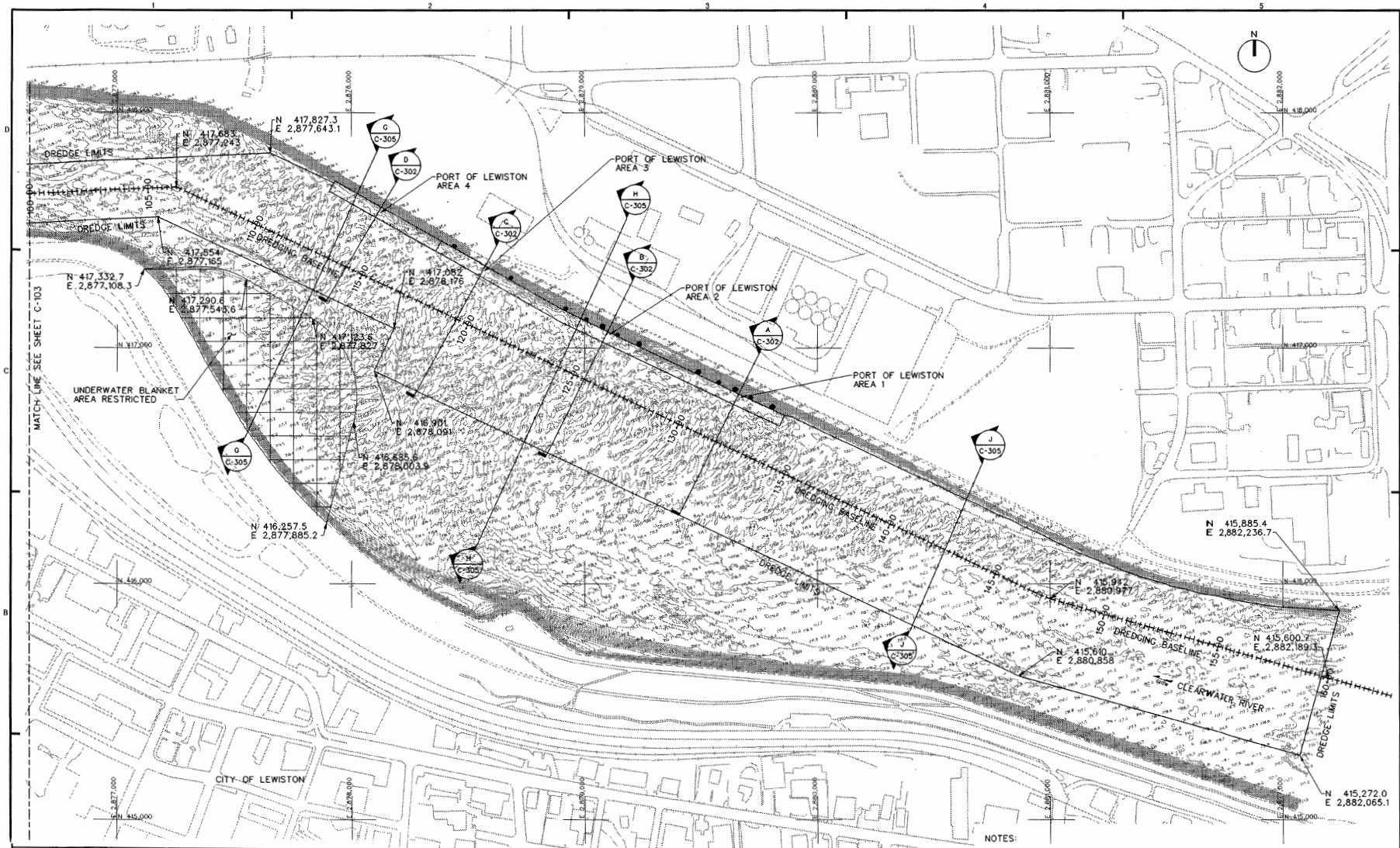

NOTES:

1. HORIZONTAL DATUM: WASHINGTON COORDINATE SYSTEM (WCS), SOUTH ZONE, NORTH AMERICAN DATUM ADJUSTMENT OF 1927 (NAD27). VERTICAL DATUM: NATIONAL GEODETICVERTICAL DATUM ADJUSTMENT OF 1929 (NGVD 29).

2. A LARGE ROCK IN FRONT OF CRANE DOCK IS TO BE REMOVED DURING DREDGING. THE LARGE ROCK IS APPROXIMATELY 2000 LBS AND 30' FROM THE FACE OF THE CENTER OF THE CRANE DOCK. SEE SPECIFICATIONS FOR DISPOSAL OF BOULDER.

3. A MULTIBEAM BATHYMETRIC SURVEY OF THE SNAKE AND CLEARWATER RIVER CONFLUENCE WAS CONDUCTED BY TERRASOND LTD. ON SEPTEMBER 29 - OCTOBER 3, 2012 WITHIN NAVIGATION CHANNEL LIMITS UNDER ORIGINAL CONTRACT. ADDITIONAL DATA WAS COLLECTED NOVEMBER 11-14TH FROM BANK TO BANK UNDER MODIFICATION 1.

REF C-101 VOL 2 (A) DREDGING PLAN: PORT OF LEWISTON AREA

0' 200' 400'

Reference No. NWW-2013-519
Applicant Port of Lewiston
In the Clearwater River
At Lewiston
Nez Perce County, Idaho
Proposed work: Dredge Accumulated sediments
Sheet 3 of 7
Date: 10-3-13

US Army Corps of Engineers
Walla Walla District

BCOES BackCheck SET
10/3/2013

Symbol	Description	Date	Appr.	Symbol	Description	Date	Appr.

DESIGNED BY: DATE: MONTH YR
DWN BY: J. BOND CHKD BY: SOLICITATION NO. XX-B-XXXX
SUBMITTED BY: CHIEF, SECTION DES. SEC. CONTRACT NO.
FILE NO. GDG-1-0-35/31

U.S. ARMY ENGINEER DISTRICT CORPS OF ENGINEERS WALLA WALLA, WASHINGTON

LOWER GRANITE AND DE HARBOR LOCK AND DAMS SNAKE RIVER AND CLEARWATER RIVER
NAVIGATION CHANNEL MAINTENANCE SNAKE AND CLEARWATER RIVER CONFLUENCE DREDGING PLAN
PORT OF LEWISTON AREA

Sheet number: C–104 VOLUME 2

L:\LLA\CAD\LLFP01\LLFP01-V2-C-104---.DGN

$TIME DATE AND TIME PLOTTED:03-OCT-2013 08:10 DESIGN FILE: L:\LLA\CAD\LLFP01\LLFP01-V2-C-104---.DGN SCALE$SCALE$

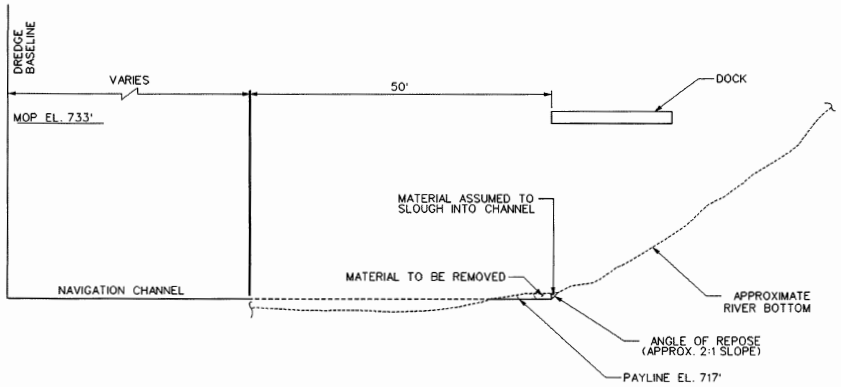

REF C-104 VOL 2 (A)

PORT OF LEWISTON: AREA 1 DOCK
TYPICAL SECTION: STA. 128+50 THROUGH 134+00

NOT TO SCALE

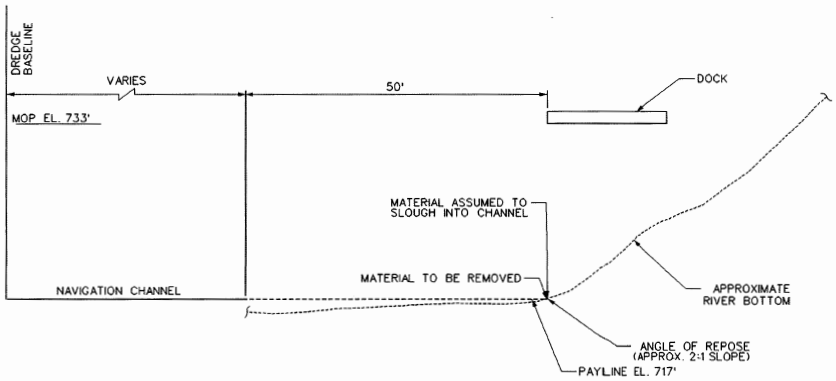

REF C-104 VOL 2 (B)

PORT OF LEWISTON: AREA 2 DOCK
TYPICAL SECTION: STA. 122+20 THROUGH 128+50

NOT TO SCALE

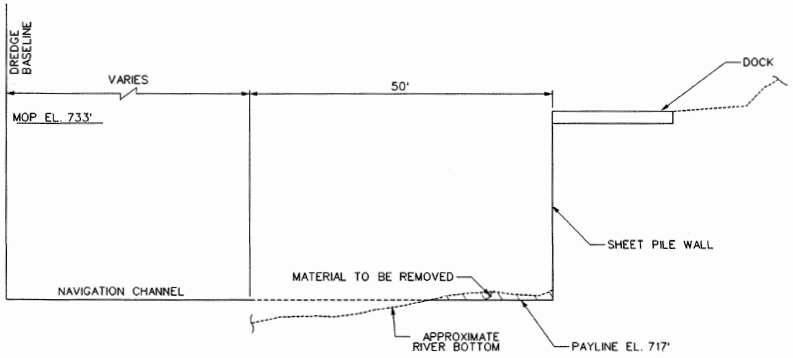

REF C-104 VOL 2 (C)

PORT OF LEWISTON: AREA 3 DOCK
TYPICAL SECTION: STA. 117+00 THROUGH 122+20

:ALE

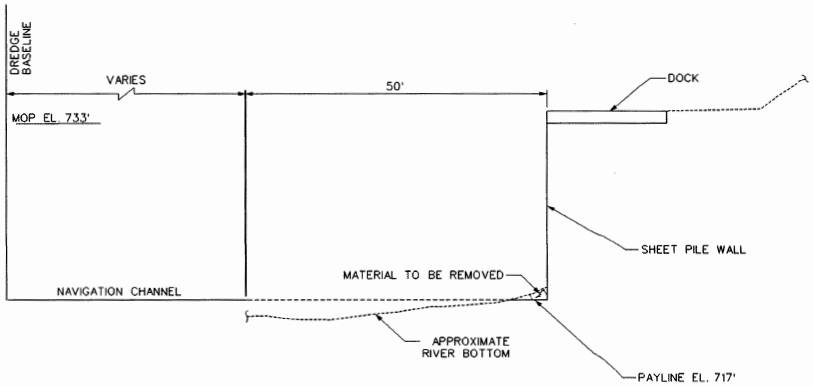

REF C-104 VOL 2 (D)

PORT OF LEWISTON: AREA 4 DOCK
TYPICAL SECTION: STA. 112+00 THROUGH 117+00

NOT TO SCALE

Reference No. NWW-2013-519
Applicant Port of Lewiston
In the Clearwater River
At Lewiston
Nez Perce County, Idaho
Proposed work: Dredge Accumulated sediments
Sheet 4 of 7
Date: 10-3-13

BORDER SIZE IS ANSI D

US Army Corps of Engineers
Walla Walla District

BCOES BackCheck SET
10/3/2013

Symbol | Description | Date | Appr. | Symbol | Description | Date | Appr.

DESIGNED BY: C. KEYES | DATE: | DWN BY: J. BOND | CHKD BY: | SUBMITTED BY: T. LEFTWICH, P.E. CHIEF, DESIGN SES. SEC. | DATE: | SOLICITATION NO. XX-B-XXXX | CONTRACT NO.

U.S. ARMY ENGINEER DISTRICT CORPS OF ENGINEERS WALLA WALLA, WASHINGTON

FILE NO. GDC-1-0-35/33

LOWER GRANITE AND ICE HARBOR LOCK AND DAMS SNAKE RIVER, WASHINGTON
NAVIGATION MAINTENANCE SNAKE AND CLEARWATER RIVERS
PORT OF LEWISTON DREDGING
VARIOUS DOCKS
TYPICAL SECTIONS

Sheet number: C–302 VOLUME 2

L:\LLA\CAD\LLFP01\LLFP01-V2-C-302---.DGN

*TIME DATE AND TIME PLOTTED:03-OCT-2013 00:11 DESIGN FILE:L:\LLA\CAD\LLFP01\LLFP01-V2-C-302---.DGN SCALE*SCALE*

Reference No. NWS-2013-916
Applicant Port of Clarkston
In the Snake River
At Clarkston
Asotin County, Washington
Proposed work: Dredge accumulated sediments
Sheet 6 of 8
Date: 10-3-13

Reference No. NWW-2013-519
Applicant Port of Lewiston
In the Clearwater River
At Lewiston
Nez Perce County, Idaho
Proposed work: Dredge Accumulated sediments
Sheet 5 of 7
Date: 10-3-13

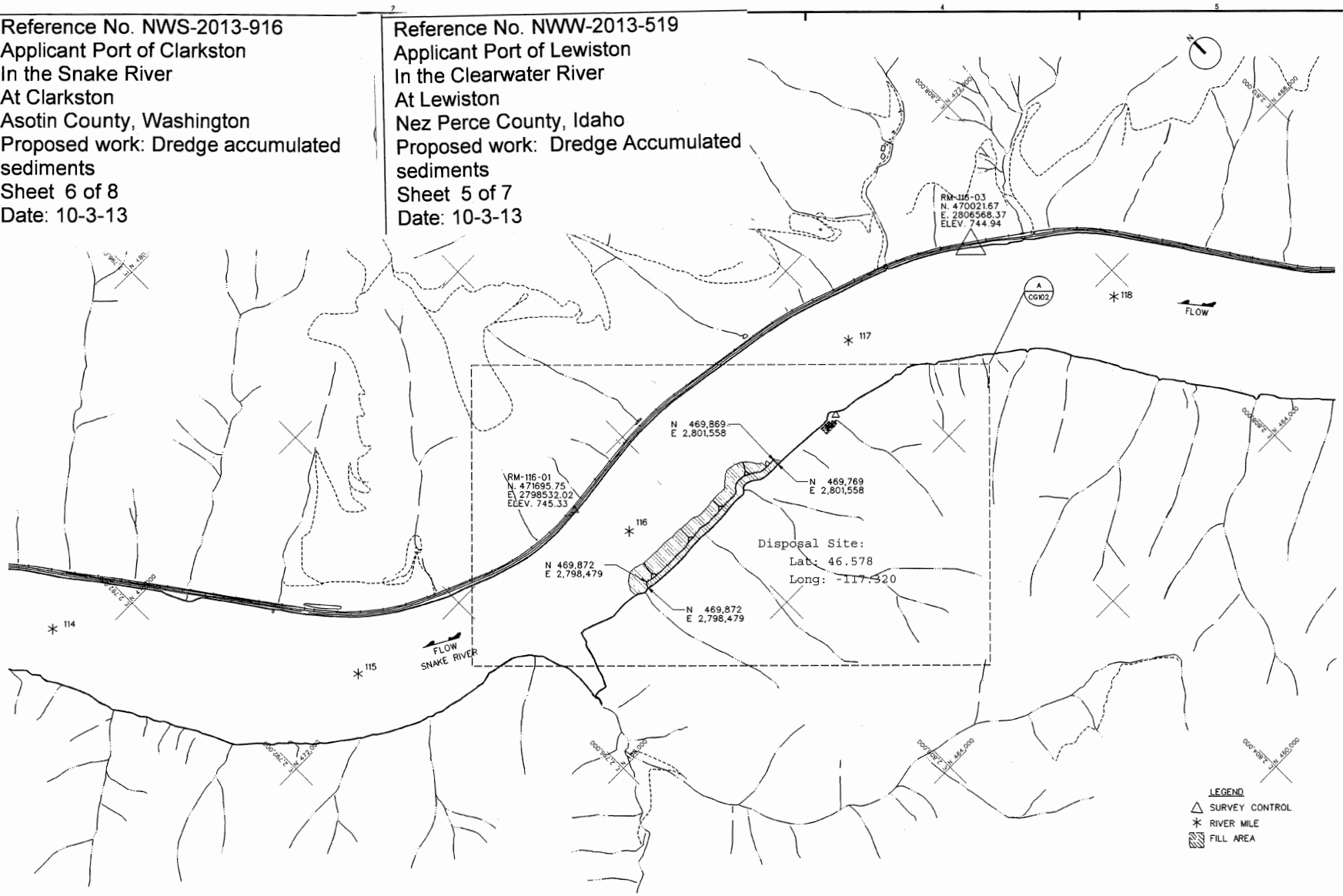

REF G-001 VOL 2 (A) DREDGED MATERIAL DISPOSAL SITE PLAN

NOTES:

1. HORIZONTAL DATUM: WASHINGTON COORDINATE SYSTEM (WCS), SOUTH ZONE, NORTH AMERICAN DATUM ADJUSTMENT OF 1927 (NAD27). VERTICAL DATUM: NATIONAL GEODETICVERTICAL DATUM ADJUSTMENT OF 1929 (NGVD 29).

US. Army Corps of Engineers
Walla Walla District

BCOES BackCheck SET
10/3/2013

U.S. ARMY ENGINEER DISTRICT CORPS OF ENGINEERS WALLA WALLA WASHINGTON

DESIGNED BY: C. BEEN
DWN. BY: R. BRUNO
CHKD. BY: E. BARTTED, PE, T. GIBBONS, P.E.
APPR. BY: R. GUENTHER, REG. ENG.
DATE: DY MON YR
SCALE: AS NOTED
XX-G-XXXX
CONTRACT NO.
FILE NO. GDG-1-0-35/37

LOWER GRANITE AND DE HARBOR LOCK AND DAMS SNAKE RIVER AND CLEARWATER RIVER

NAVIGATION CHANNEL MAINTENANCE
SNAKE AND CLEARWATER CONFLUENCE
LOWER GRANITE RIVER MILE 116
DREDGED MATERIAL DISPOSAL
SITE PLAN

Sheet number:
CG101
VOLUME 2

L:\LLA\CAD\LLFP01\LLFP01-V2-CG101---.DGN

BORDER SIZE IS ANSI D

*TIME DATE AND TIME PLOTTED:03-OCT-2013 08:12 DESIGN FILE:L:\LLA\CAD\LLFP01\LLFP01-V2-CG101---.DGN SCALE*SCALE*

Reference No. NWS-2013-916
Applicant Port of Clarkston
In the Snake River
At Clarkston
Asotin County, Washington
Proposed work: Dredge accumulated sediments
Sheet 7 of 8
Date: 10-3-13

Reference No. NWW-2013-519
Applicant Port of Lewiston
In the Clearwater River
At Lewiston
Nez Perce County, Idaho
Proposed work: Dredge Accumulated sediments
Sheet 6 of 7
Date: 10-3-13

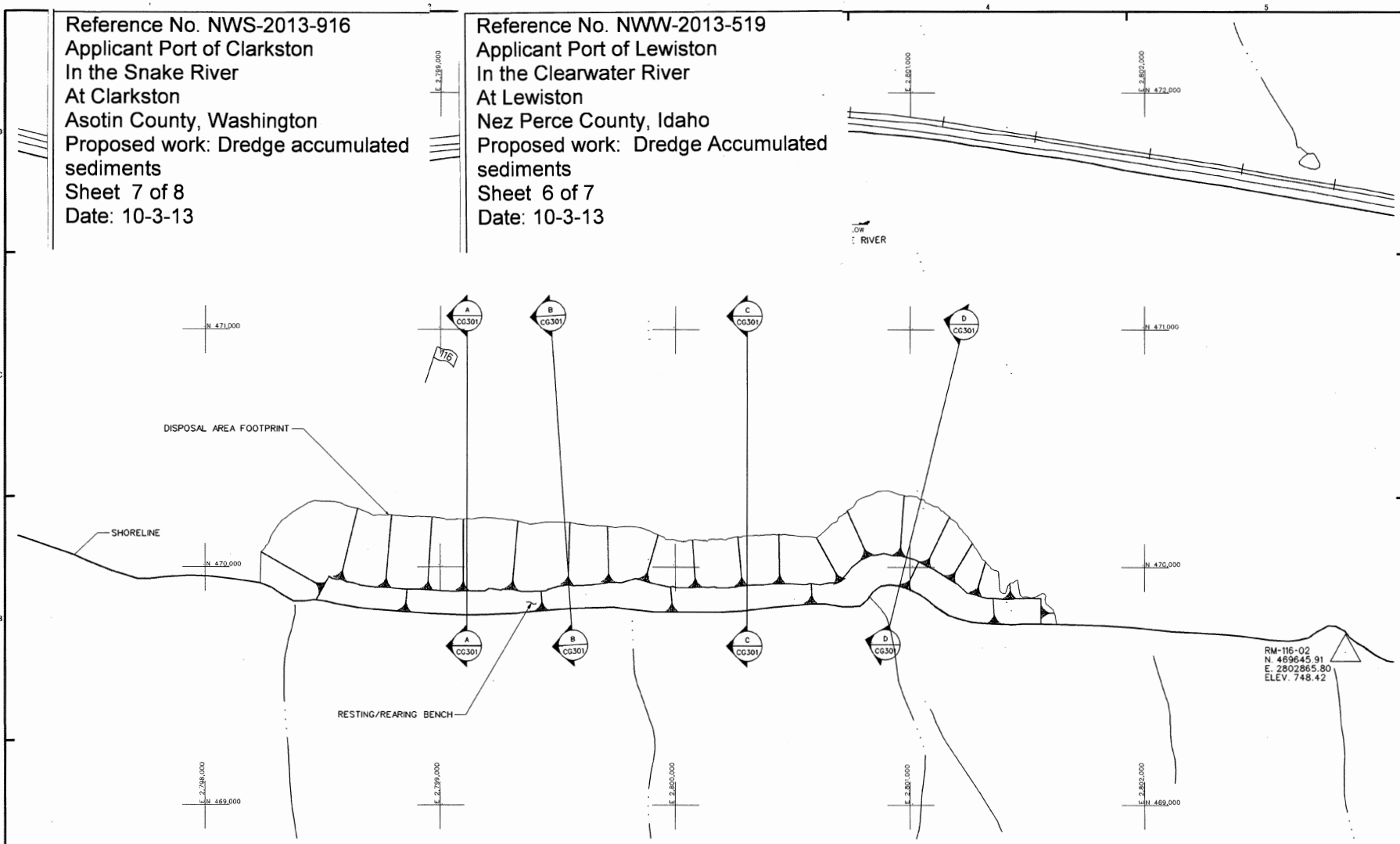

NOTES:

1. HORIZONTAL DATUM: WASHINGTON COORDINATE SYSTEM (WCS), SOUTH ZONE, NORTH AMERICAN DATUM ADJUSTMENT OF 1927 (NAD27). VERTICAL DATUM: NATIONAL GEODETICVERTICAL DATUM ADJUSTMENT OF 1929 (NGVD 29).

US Army Corps of Engineers
Walla Walla District

BCOES BackCheck SET
10/3/2013

Subject	Description	Date	Init	Checked	Description	Date	Init

DESIGNED BY: C. BEEN
DWN BY: J. BOHD
CHKD BY: CHK BY
DATE: DY MON YR
SOLICITATION NO. XX-B-XXXX
CONTRACT NO.
R. WHITSON, P.E.
CHIEF SCOTTSB DES. SEC.
FILE NO. GDG-1-0-35/38

U.S. ARMY ENGINEER DISTRICT
CORPS OF ENGINEERS
WALLA WALLA, WASHINGTON

LOWER GRANITE AND ICE HARBOR LOCK AND DAMS
SNAKE RIVER AND CLEARWATER RIVER

NAVIGATION CHANNEL MAINTENANCE
SNAKE AND CLEARWATER CONFLUENCE
LOWER GRANITE RIVER MILE 116
DREDGED MATERIAL
DISPOSAL SITE DETAIL

Sheet number:
CG102
VOLUME 2

L:\LLA\CAD\LLFP01\LLFP01-V2-CG102---.DGN

BORDER SIZE IS ANSI D

*TIME DATE AND TIME PLOTTED:03-OCT-2013 08:12 DESIGN FILE:L:\LLA\CAD\LLFP01\LLFP01-V2-CG102---.DGN SCALE*SCALE*

Reference No. NWS-2013-916
Applicant Port of Clarkston
In the Snake River
At Clarkston
Asotin County, Washington
Proposed work: Dredge accumulated sediments
Sheet 8 of 8
Date: 10-3-13

Reference No. NWW-2013-519
Applicant Port of Lewiston
In the Clearwater River
At Lewiston
Nez Perce County, Idaho
Proposed work: Dredge Accumulated sediments
Sheet 7 of 7
Date: 10-3-13

NOTE:

1. PLACEMENT OF EXCAVATED MATERIALS SHALL FULLY DEVELOP THE RESTING/REARING BENCH AS SHOWN IN SECTIONS. PLACEMENT SHALL BEGIN AT THE UPSTREAM END OF THE DISPOSAL AREA AND SHALL PROCEED DOWNSTREAM FOR THE FULL DISPOSAL AREA WIDTH FROM BANK TO TOE TO THE ELEVATIONS SHOWN.

2. ADJUST BREAK POINT LOCATIONS AS NECESSARY TO CATCH TOE OF DISPOSAL AREA, AS SHOWN, AND PROVIDE MAXIMUM WIDTH FOR RESTING/REARING BENCH. INDICATED SLOPES SHALL BE MAINTAINED. ADJUST BENCH ALIGNMENT TO ALLOW SLOPE TOE TO CATCH EXISTING BENCH.

3. RESTING/REARING BENCH MAY VARY FROM 2% TO 5% SLOPE.

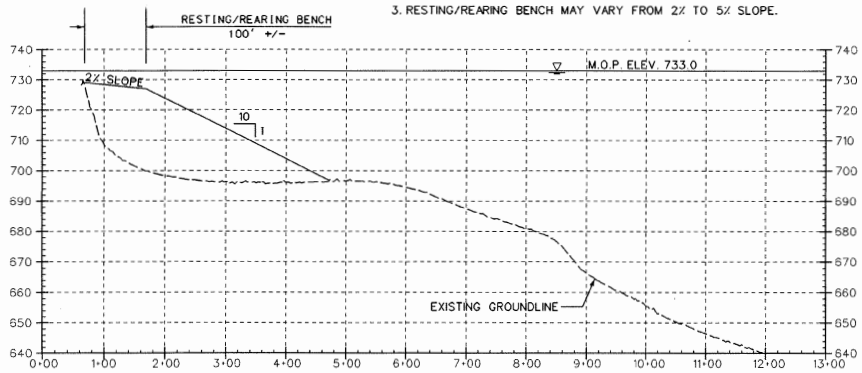

REF CG102 VOL 2 (A) DREDGED MATERIAL DISPOSAL SITE – SECTION

HORIZONTAL SCALE 0' 100' 200' VERTICAL SCALE 0' 20' 40'

REF CG102 VOL 2 (B) DREDGED MATERIAL DISPOSAL SITE – TYPICAL

HORIZONTAL SCALE 0' 100' 200' VERTICAL SCALE 0' 20' 40'

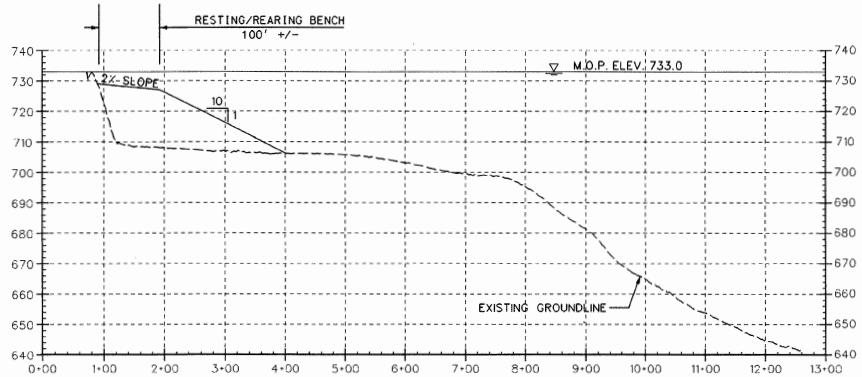

REF CG102 VOL 2 (C) DREDGED MATERIAL DISPOSAL SITE – SECTION

HORIZONTAL SCALE 0' 100' 200' VERTICAL SCALE 0' 20' 40'

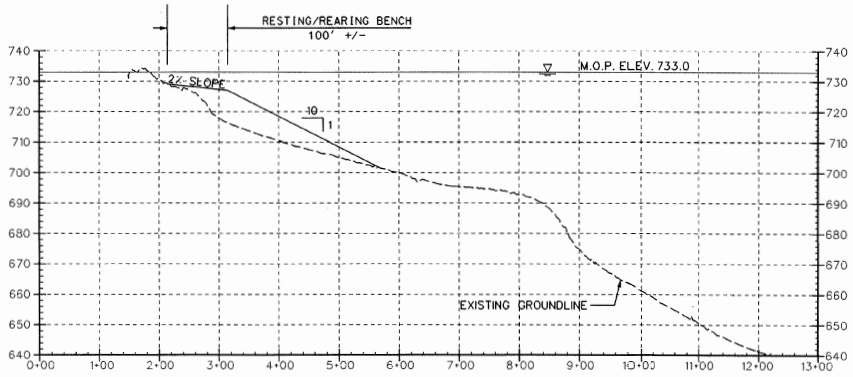

REF CG102 VOL 2 (D) DREDGED MATERIAL DISPOSAL SITE – SECTION

HORIZONTAL SCALE 0' 100' 200' VERTICAL SCALE 0' 20' 40'

US Army Corps of Engineers
Walla Walla District

BICOES BackCheck SET
10/3/2013

Symbol	Description	Date	Appr.	Symbol	Description	Date	Appr.

U.S. ARMY ENGINEER DISTRICT CORPS OF ENGINEERS WALLA WALLA, WASHINGTON

DESIGNED BY: C. BEEN
DWN. BY: J. HUNTER
CHKD. BY: DWN. BY:
SUBMITTED BY: Y. GIBBONS, P.E. CHIEF, DESIGN SECTION, MES, SEC.
DATE: BY: MON YR
SCALE: AS NOTED
CONTRACT NO.
FILE NO. GDG-1-0-35/39

LOWER GRANITE AND ICE HARBOR LOCK AND DAMS
SNAKE RIVER AND CLEARWATER RIVER
NAVIGATION CHANNEL MAINTENANCE
SNAKE AND CLEARWATER CONFLUENCE
LOWER GRANITE RIVER MILE 116
DREDGED MATERIAL
DISPOSAL SITE X-SECTIONS

Sheet number:
CG301
VOLUME 2

L:\LLA\CAD\LLFP01\LLFP01-V2-CG301---.DGN

BORDER SIZE IS ANSI D

*TIME DATE AND TIME PLOTTED:03-OCT-2013 08:13 DESIGN FILE:L:\LLA\CAD\LLFP01\LLFP01-V2-CG301---.DGN SCALE*SCALE*